55651960

425-65 R 22.5

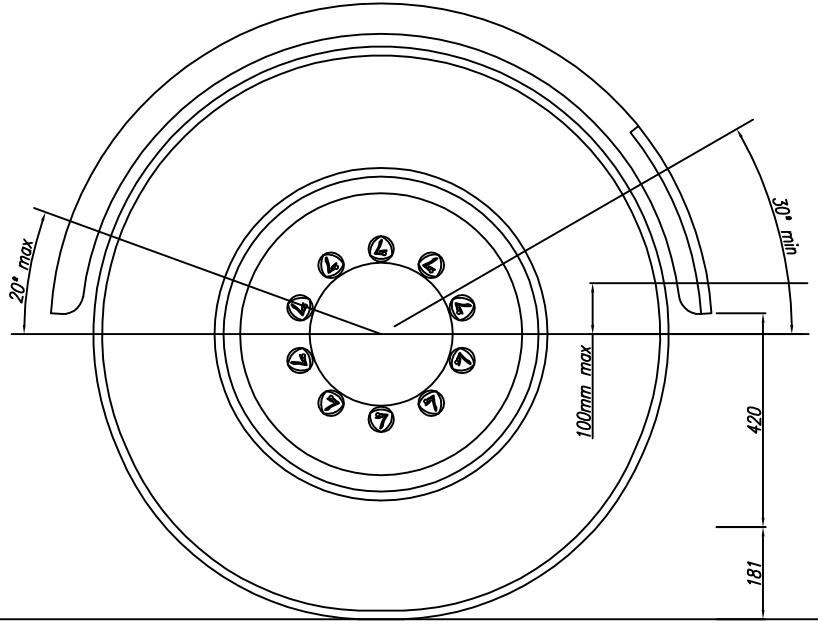
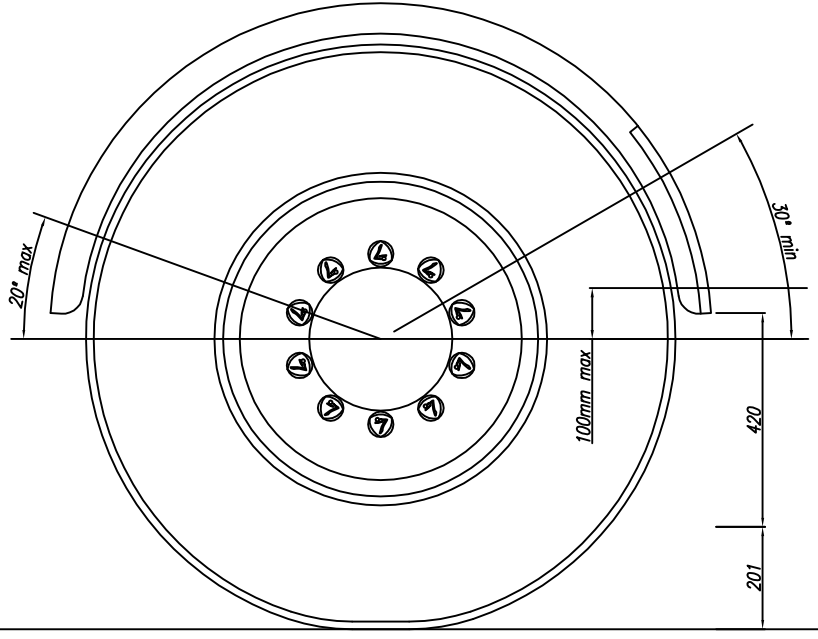
445-65 R 22.5